ASSEMBLY	WEIGHT
[8'] S1-2400 cw MBK6-6-50	18.0 kg [39.6 lb]
[10'] S1-3000 cw MBK6-6-50	20.5 kg [45.1 lb]

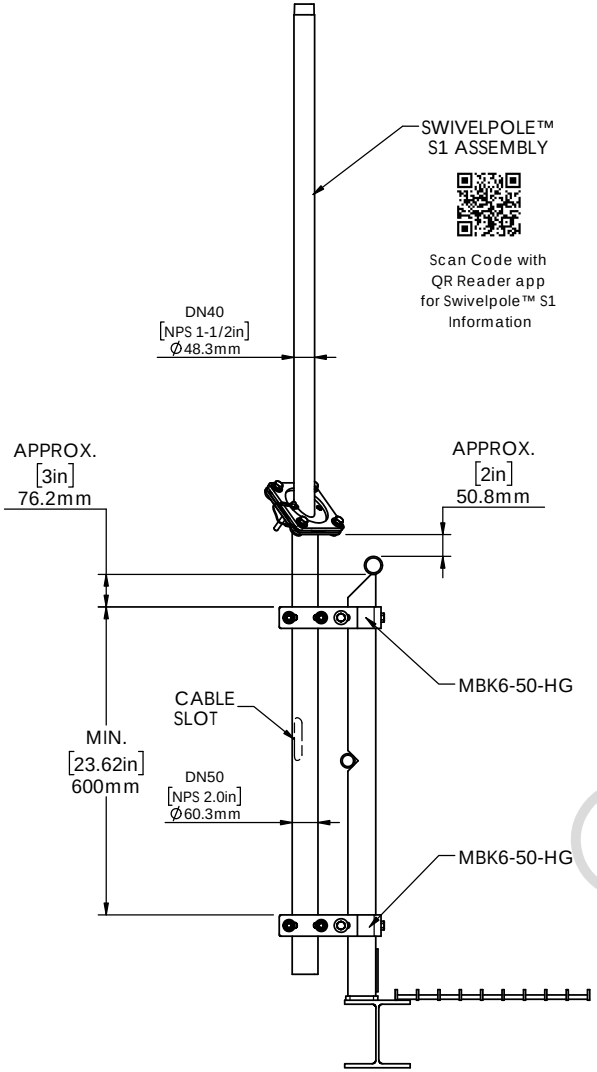

MBK6-6-50-HG
TYPICAL ASSEMBLY
FINISH: HOT DIPPED GALVANIZED

IEC

MBK6-50-HG BRACKET

WEIGHT (INCLUDES BRACKET AND FASTENERS) = 2.2 kg [4.8 lb]

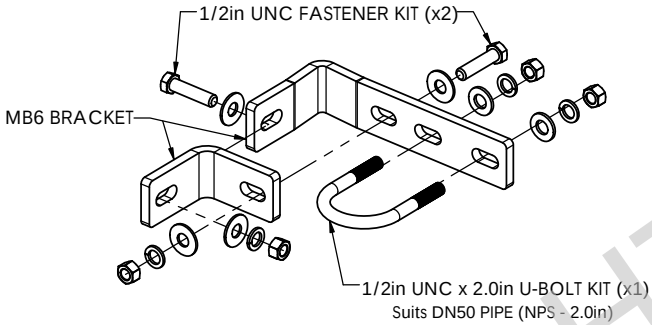

MBK6-50-HG BRACKET

WEIGHT (INCLUDES BRACKET AND FASTENERS) = 2.2 kg [4.8 lb]

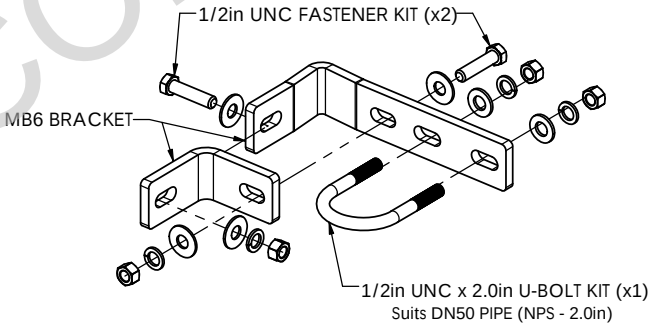

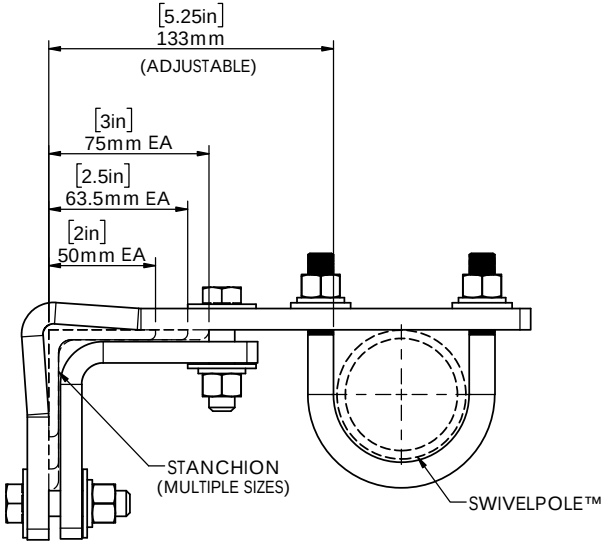

MBK6 DIMENSIONS

TO SUIT 2in, 2-1/2in AND 3in EQUAL ANGLE STANCHION
WITH FLANGE THICKNESS FROM 3/16in TO 3/8in

Scan Code with
QR Reader app for more
Swivelpole™ Bracket Solutions

PATENTED
PRODUCTS

www.swivelpole.com

Swivelpole™

ALL DIMENSIONS ARE IN MILLIMETERS / INCHES	PROJECT: SWIVELPOLE	SERIES / CODE: MBK	PART NUMBER: MBK6-6-50-HG (RQ1250)
DRAWN BY: AD	DATE: 21/3/10	TITLE: Swivelpole™ S1 Mounting Bracket Kit Typical Installation Client - Bracket Detail	
CHECKED BY: FB	DATE: 23/3/10		
APPROVED BY: PP	DATE: 30/3/10		
THIRD ANGLE PROJECTION	SCALE: N.T.S.	DRG No: C-NA-MBK6-6-50-HG	REV: 3 / A3